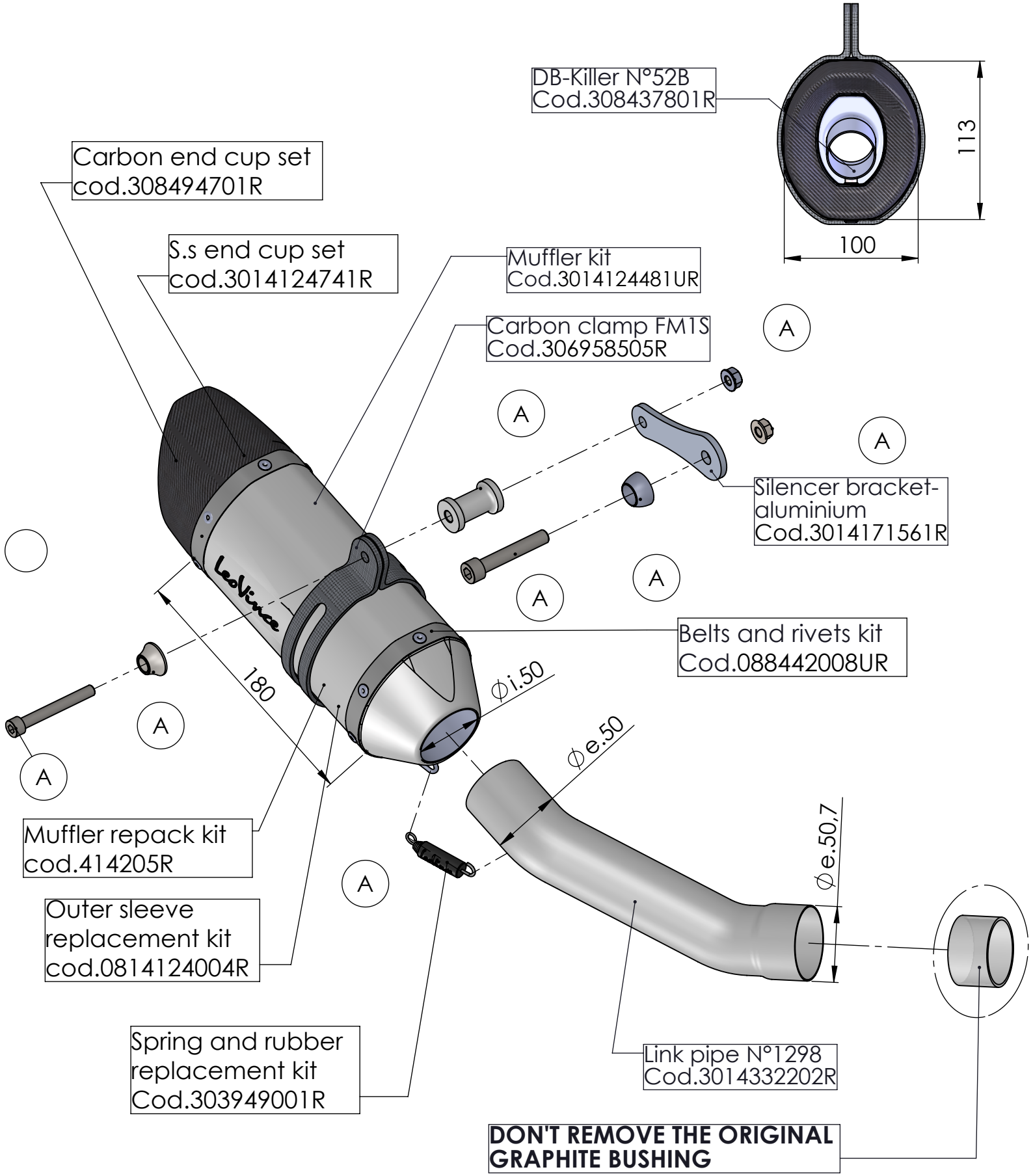


# ART. 14332EU - SPARE PARTS

KAWASAKI Z900

Ⓐ FITTING KIT cod.3014332601R