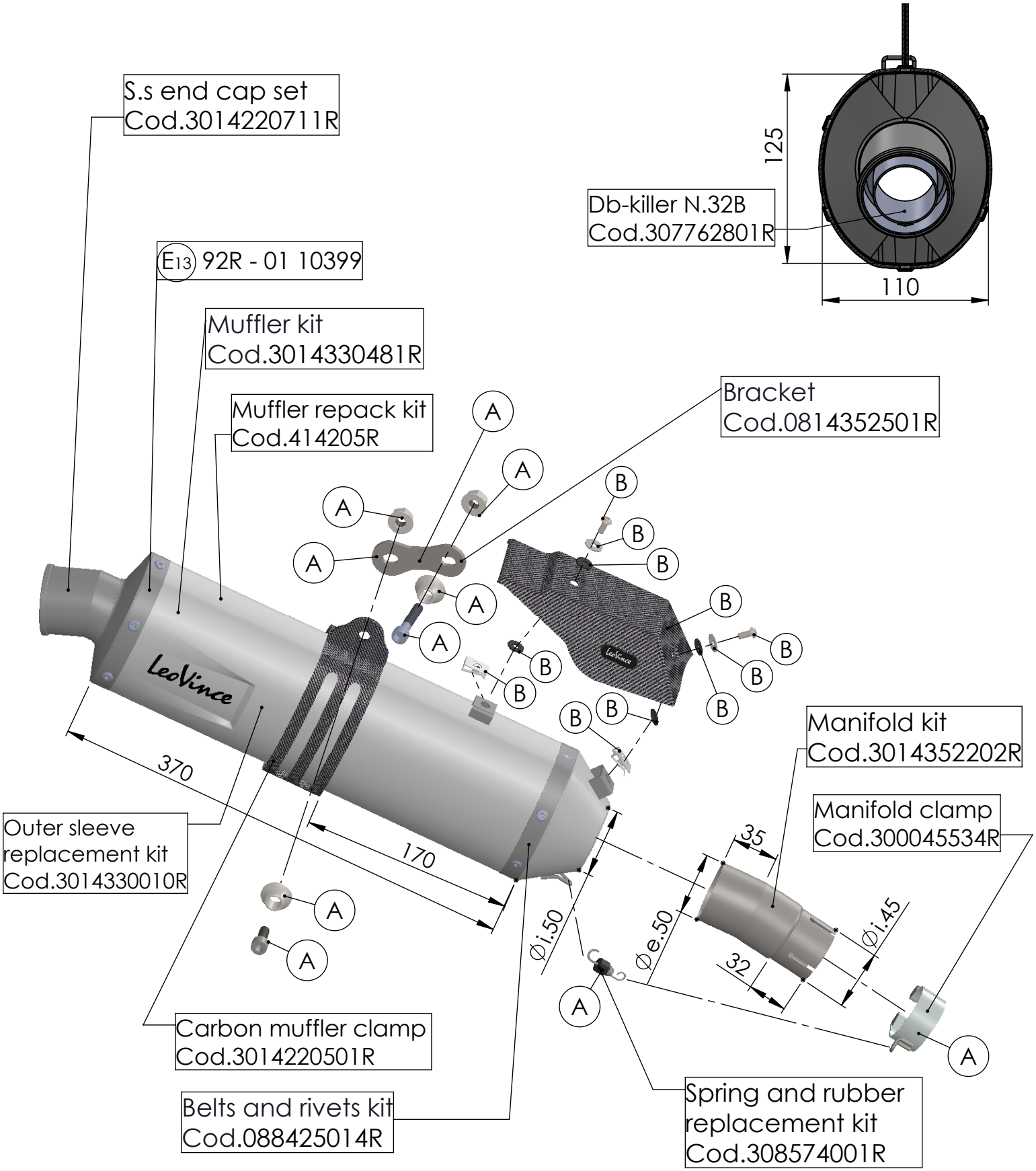

ART. 14352E SPARE PARTS

TRIUMPH TIGER 900 GT / RALLY / PRO
(fits with original panniers) (also fits 35kW version)

(A) FITTING KIT Cod. 3014352601R
(B) CARBON COVER Cod.3014330001R