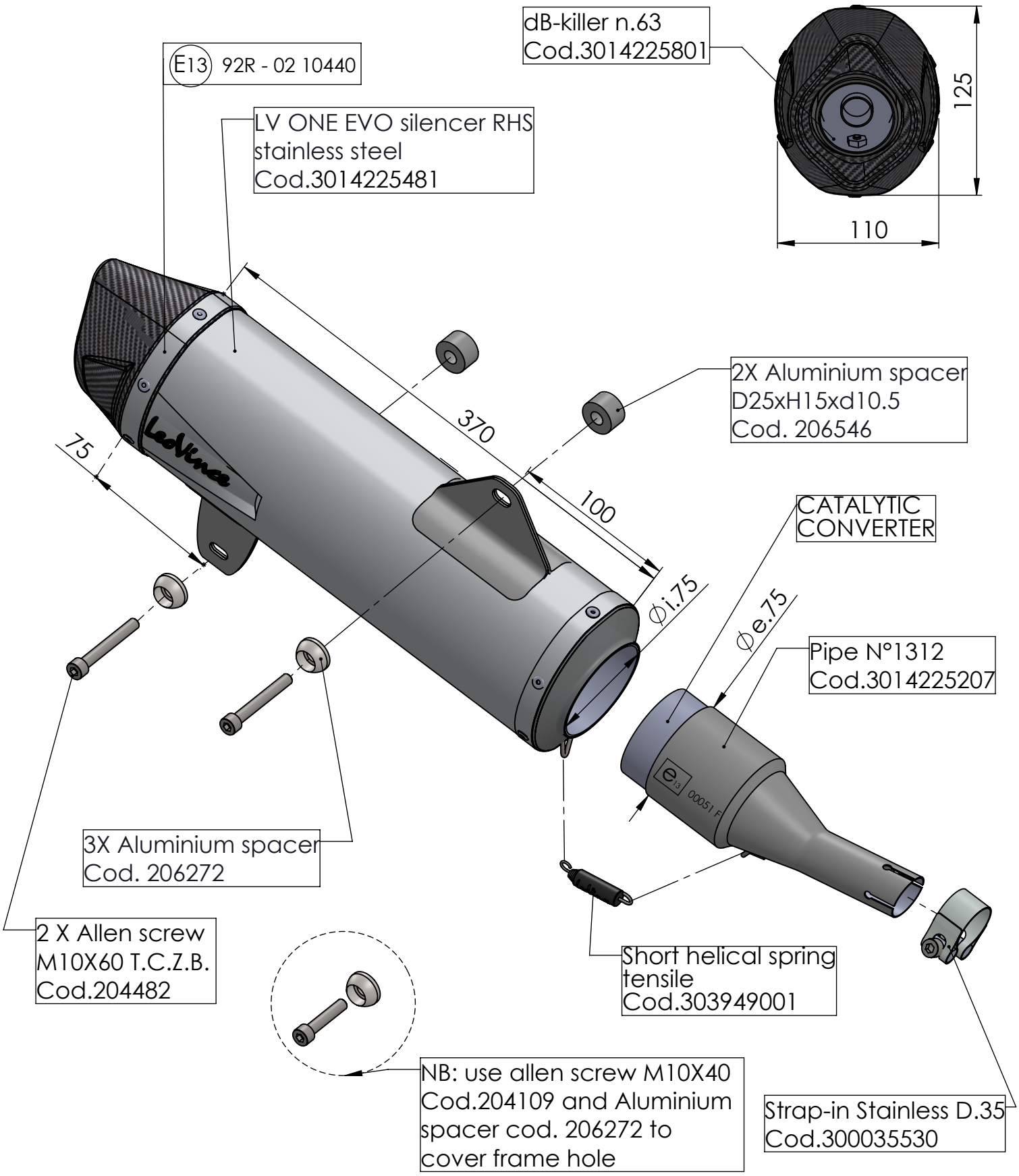

ART. 14225EK

YAMAHA X-MAX 300 / IRON MAX

SLIP-ON - LV-ONE EVO - STAINLESS STEEL - APPROVED