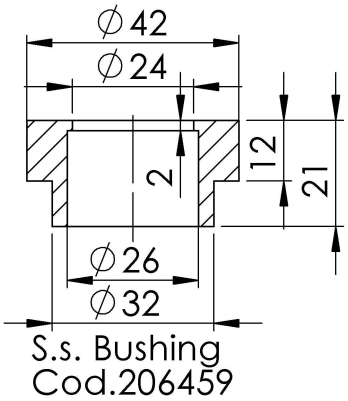

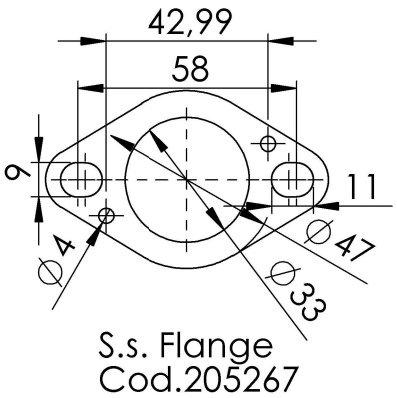

End cap set
Cod.3014008701R

End cap set
Cod.3014259711R

Muffler Kit
Cod.3014260481R

Muffler clamp
Cod.307572505R

Outer sleeve
replacement kit
Cod.409117R

Belts and rivets kit
Cod.0814259006R

Muffler repack kit
Cod.414205R

Bushing kit
Cod.206459R

Flange kit
Cod.205267R

Spring and rubber
replacement kit
Cod.303949001R

Manifold kit
Cod.3014261204R

300 ∅1.45 ∅E.42,40 ∅26 ∅45 ∅28 105 A

ART. 14262EK SPARE PARTS

YAMAHA MT-125 / YZF-R125

Ⓐ FITTING KIT Cod.3014261601R